Abamaster, Inc

Model Number: 2003

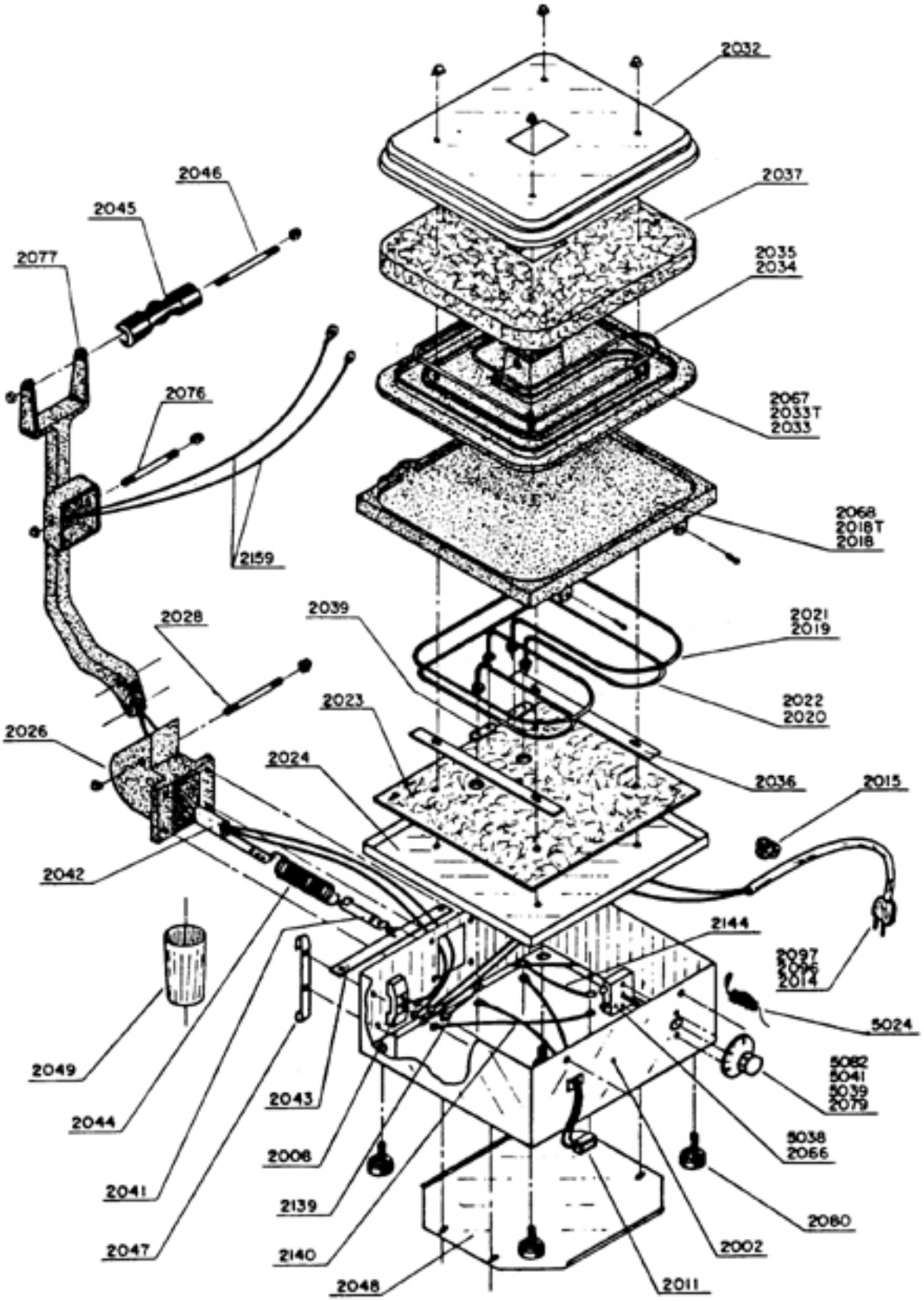

2170 NW 19 Avenue Miami, Florida 33142-7452 Phone: (305) 325-8888 Fax: (305) 325-9760 website:www.abamaster.com

Specifications are subject to change without notice